Ovisnost valnih oblika silaznog pretvarača o otporu trošila R_d

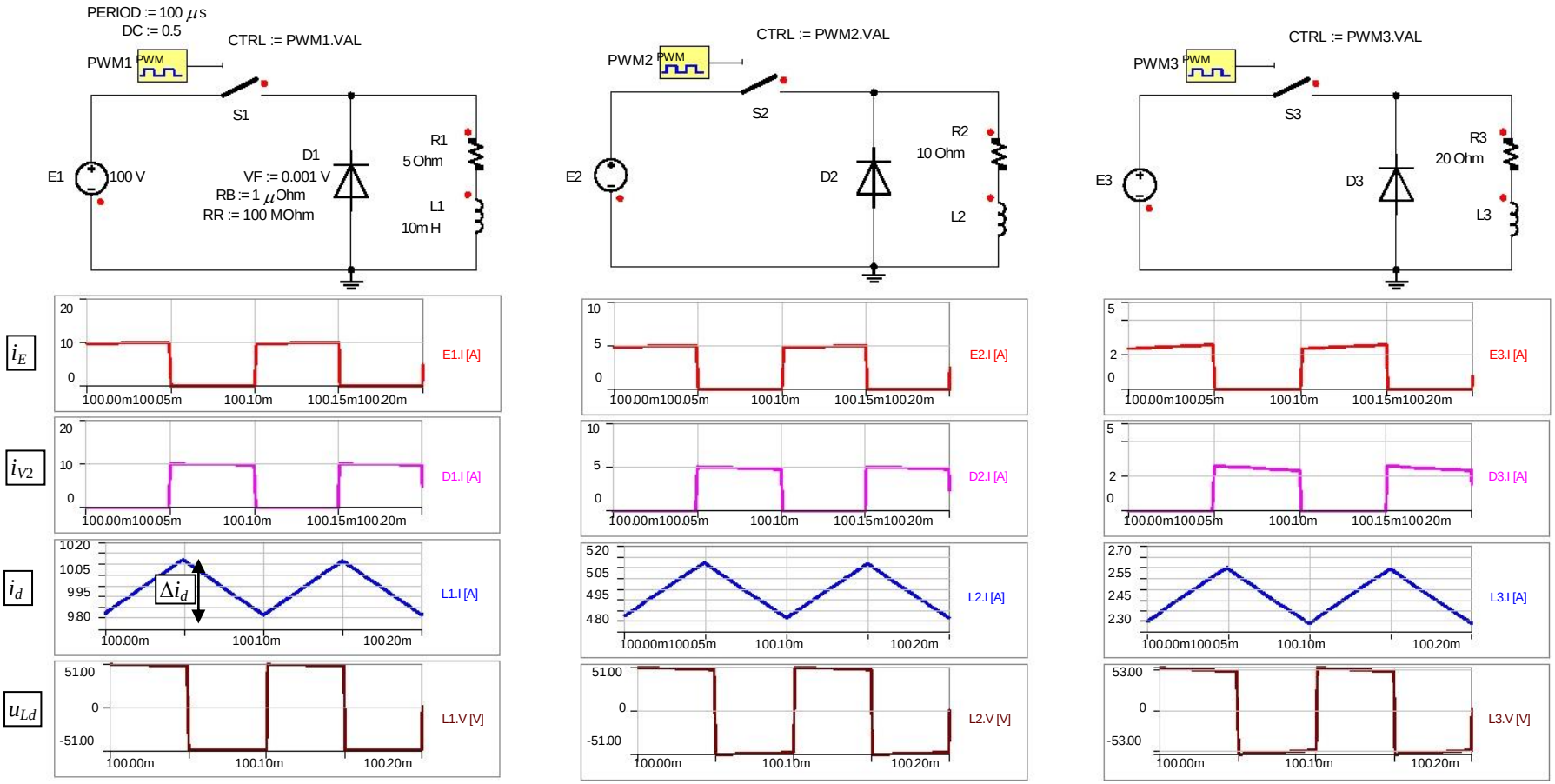

$T_s = 1/f_s$, $U_d(0) = \alpha E$, $I_d(0) = U_d(0)/R_d$, $P_d(0) = U_d(0)\,I_d(0)$, $I_E(0) = P_d(0)/E$, $I_{V2}(0) = I_d(0) - I_E(0)$, $\tau = L_d/R_d$, $\Delta i_{d\uparrow} = [E - U_d(0)]\alpha\, T_s/L_d$, $\Delta i_{d\downarrow} = -\,U_d(0)(1-\alpha)T_s/L_d$

E	100	V
α	0,5	
f_s	10000	Hz
T_s	0,0001	s
L_d	0,01	H

R_d, Ω	$U_d(0)$, V	$I_d(0)$, A	$P_d(0)$, W	$I_E(0)$, A	$I_{V2}(0)$, A	τ, s	$\Delta\, i_{d\uparrow}$, A	$\Delta\, i_{d\downarrow}$, A
5	50	10,00	500,00	5,00	5,00	0,00200	0,25	-0,25
10	50	5,00	250,00	2,50	2,50	0,00100	0,25	-0,25
20	50	2,50	125,00	1,25	1,25	0,00050	0,25	-0,25

Željko Stojanovic,2014

Ovisnost valnih oblika silaznog pretvarača o induktivitetu trošila L_d

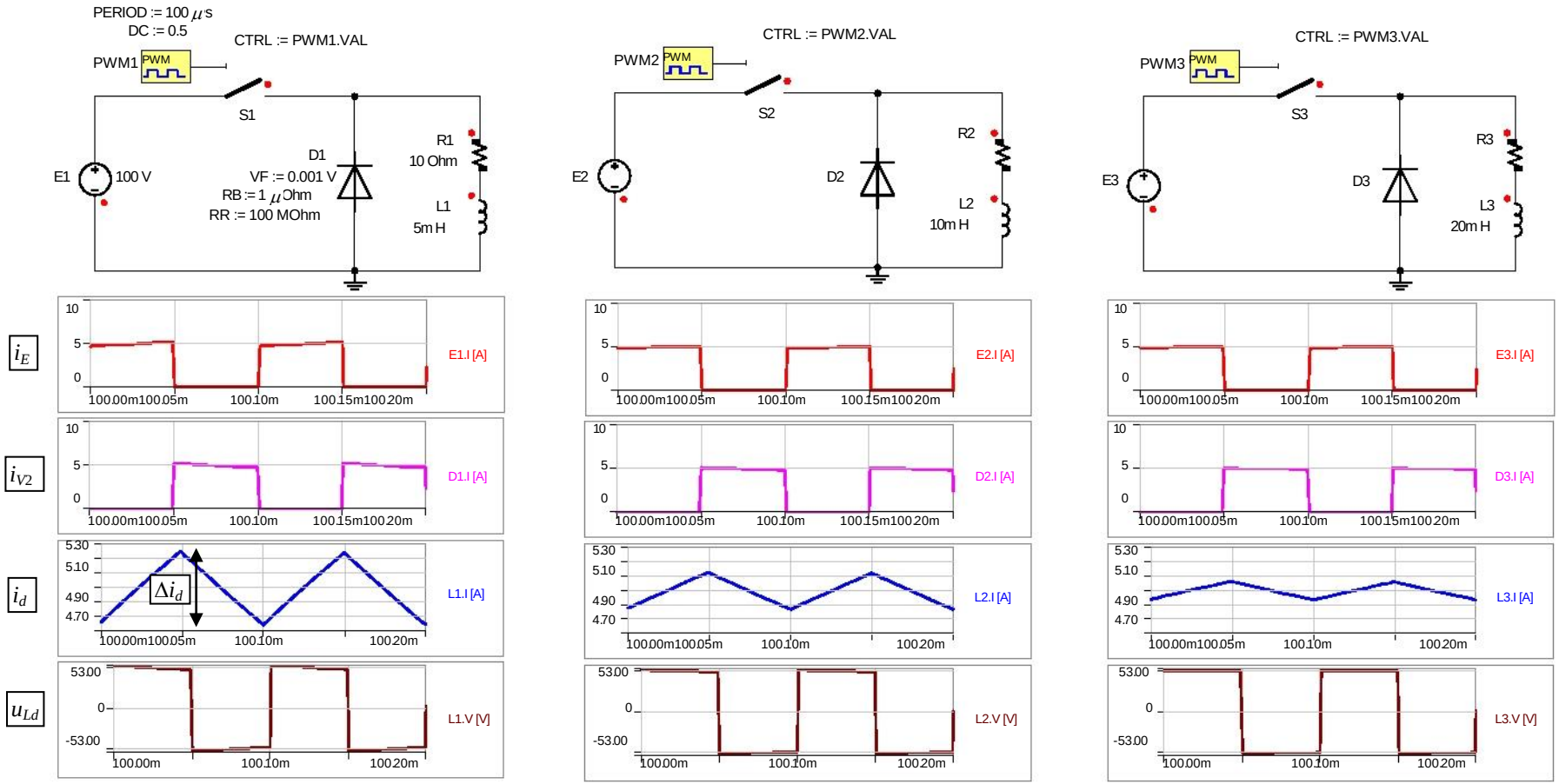

$T_s = 1/f_s$, $U_d(0) = \alpha E$, $I_d(0) = U_d(0)/R_d$, $P_d(0) = U_d(0)\, I_d(0)$, $I_E(0) = P_d(0)/E$, $I_{V2}(0) = I_d(0) - I_E(0)$, $\tau = L_d/R_d$, $\Delta i_{d\uparrow} = [E - U_d(0)]\alpha\, T_s/L_d$, $\Delta i_{d\downarrow} = -\, U_d(0)(1-\alpha)T_s/L_d$

E	100	V
α	0,5	
f_s	10000	Hz
T_s	0,0001	s
R_d	10	Ω

L_d, H	$U_d(0)$, V	$I_d(0)$, A	$P_d(0)$, W	$I_E(0)$, A	$I_{V2}(0)$, A	τ, s	Δi_d, A	Δi_d, A
0,005	50	5,00	250,00	2,50	2,50	0,00050	0,5000	-0,5000
0,01	50	5,00	250,00	2,50	2,50	0,00100	0,2500	-0,2500
0,02	50	5,00	250,00	2,50	2,50	0,00200	0,1250	-0,1250

Željko Stojanovic,2014

Ovisnost valnih oblika silaznog pretvarača o faktoru vođenja α

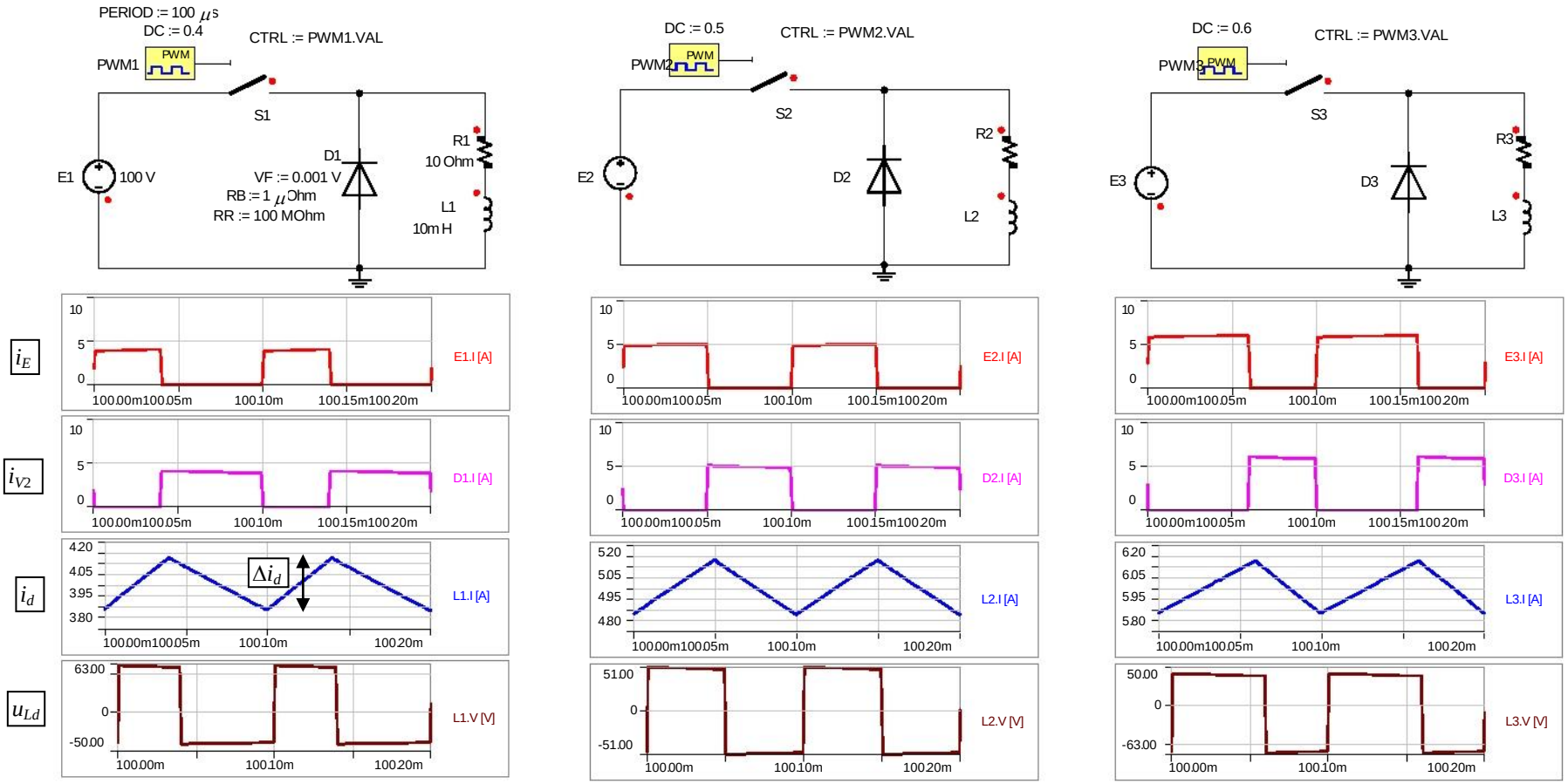

$T_s = 1/f_s$, $\tau = L_d/R_d$, $U_d(0) = \alpha E$, $I_d(0) = U_d(0)/R_d$, $P_d(0) = U_d(0)\,I_d(0)$, $I_E(0) = P_d(0)/E$, $I_{V2}(0) = I_d(0) - I_E(0)$, $\Delta i_{d\uparrow} = [E - U_d(0)]\alpha\, T_s/L_d$, $\Delta i_{d\downarrow} = -\,U_d(0)(1-\alpha)T_s/L_d$

E	100	V
R_d	10	Ω
f_s	10000	Hz
T_s	0,0001	s
L_d	0,01	H
τ	0,001	s

α	$U_d(0)$, V	$I_d(0)$, A	$P_d(0)$, W	$I_E(0)$, A	$I_{V2}(0)$, A	Δi_d, A	Δi_d, A
0,4	40	4,00	160,00	1,60	2,40	0,24	-0,24
0,5	50	5,00	250,00	2,50	2,50	0,25	-0,25
0,6	60	6,00	360,00	3,60	2,40	0,24	-0,24

Željko Stojanovic,2014

Ovisnost valnih oblika silaznog pretvarača o sklopnoj frekvenciji f_S

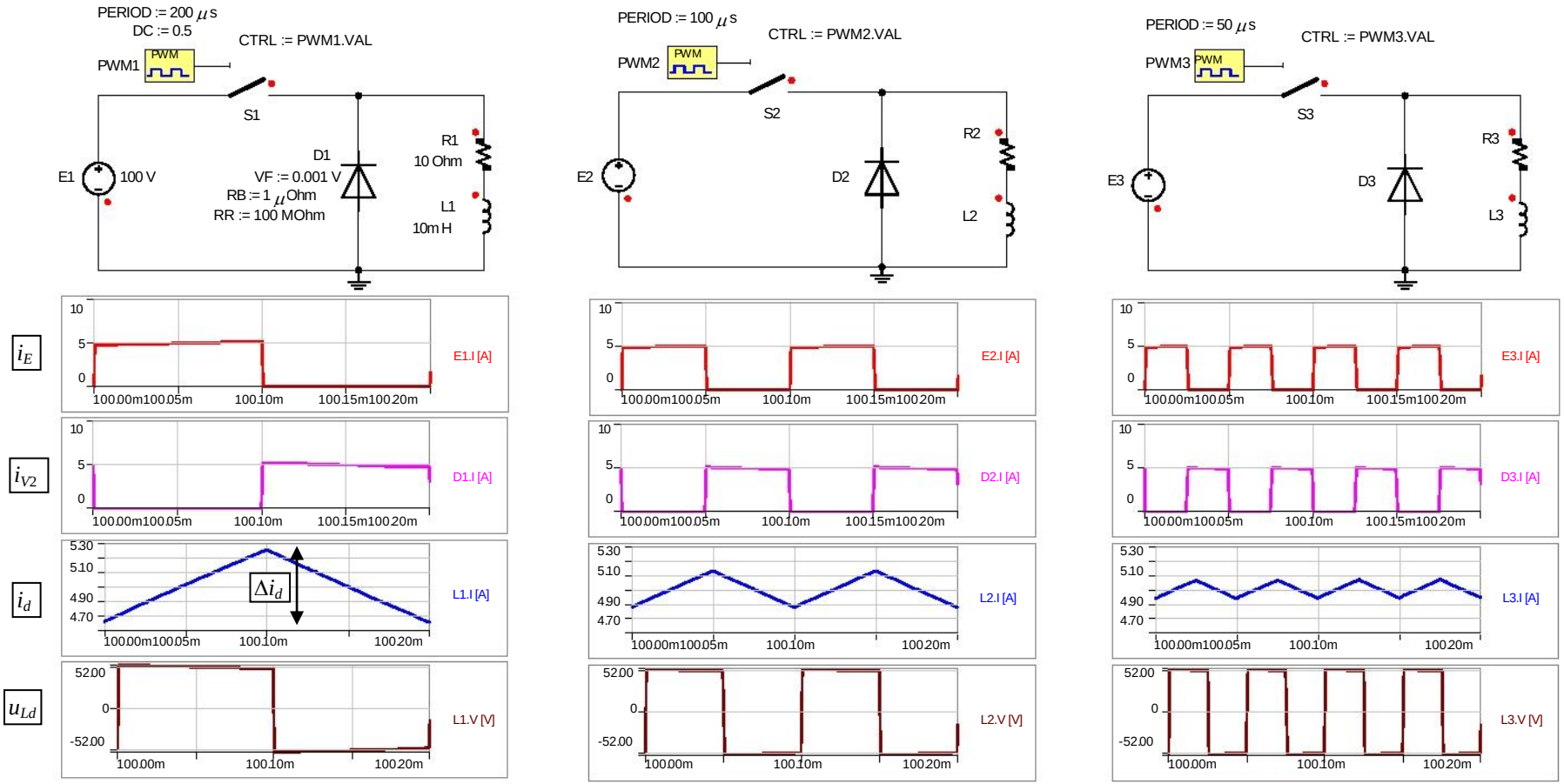

$\tau = L_d/R_d$, $T_s = 1/f_s$, $U_d(0) = \alpha E$, $I_d(0) = U_d(0)/R_d$, $P_d(0) = U_d(0)\,I_d(0)$, $I_E(0) = P_d(0)/E$, $I_{V2}(0) = I_d(0) - I_E(0)$, $\Delta i_{d\uparrow} = [E - U_d(0)]\alpha\, T_s/L_d$, $\Delta i_{d\downarrow} = -\,U_d(0)(1-\alpha)T_s/L_d$

E	100	V
α	0,5	
R_d	10	Ω
L_d	0,01	H
τ	0,001	s

f_S, Hz	T_S, s	$U_d(0)$, V	$I_d(0)$, A	$P_d(0)$, W	$I_E(0)$, A	$I_{V2}(0)$, A	$\Delta\, i_d$, A	$\Delta\, i_d$, A
5000	0,000200	50	5,00	250,00	2,50	2,50	0,5	-0,5
10000	0,000100	50	5,00	250,00	2,50	2,50	0,25	-0,25
20000	0,000050	50	5,00	250,00	2,50	2,50	0,125	-0,125

Željko Stojanovic,2014